Palong and Black Lahu Ecological Knowledge of the Sustainability of Forest Watershed Management and Agroforestry Ecosystems

Chalathon Choocharoen, Pornchai Preechapanya and Andreas Neef

The Uplands Program, Hohenheim Office, Chiang Mai University

12-15 December 2006, Luang Prabang, Lao PDR

Outline of the presentation

- **Introduction**
- **Objectives**
- **Methodology**
- **Results**
- **Conclusion**

Introduction

- **It is widely believed that the land use practices of minority people living in the upland areas of Thailand cause many problems**

- **Local knowledge of agroforestry and watershed management is often ignored by scientists and policy-makers**

Objectives

1. **Recording local knowledge of the watershed and agroforestry ecological system**
2. **Comparison between local and scientific knowledge**
3. **Integrating both knowledge domains in order to support sustainable watershed management**

Methodology

1. **Participatory Rural Appraisal (PRA) methods (mapping, livelihood analysis, transects)**

2. **Semi-structured interviews**

3. **Agroecological Knowledge Toolkit (AKT5)**

Study area

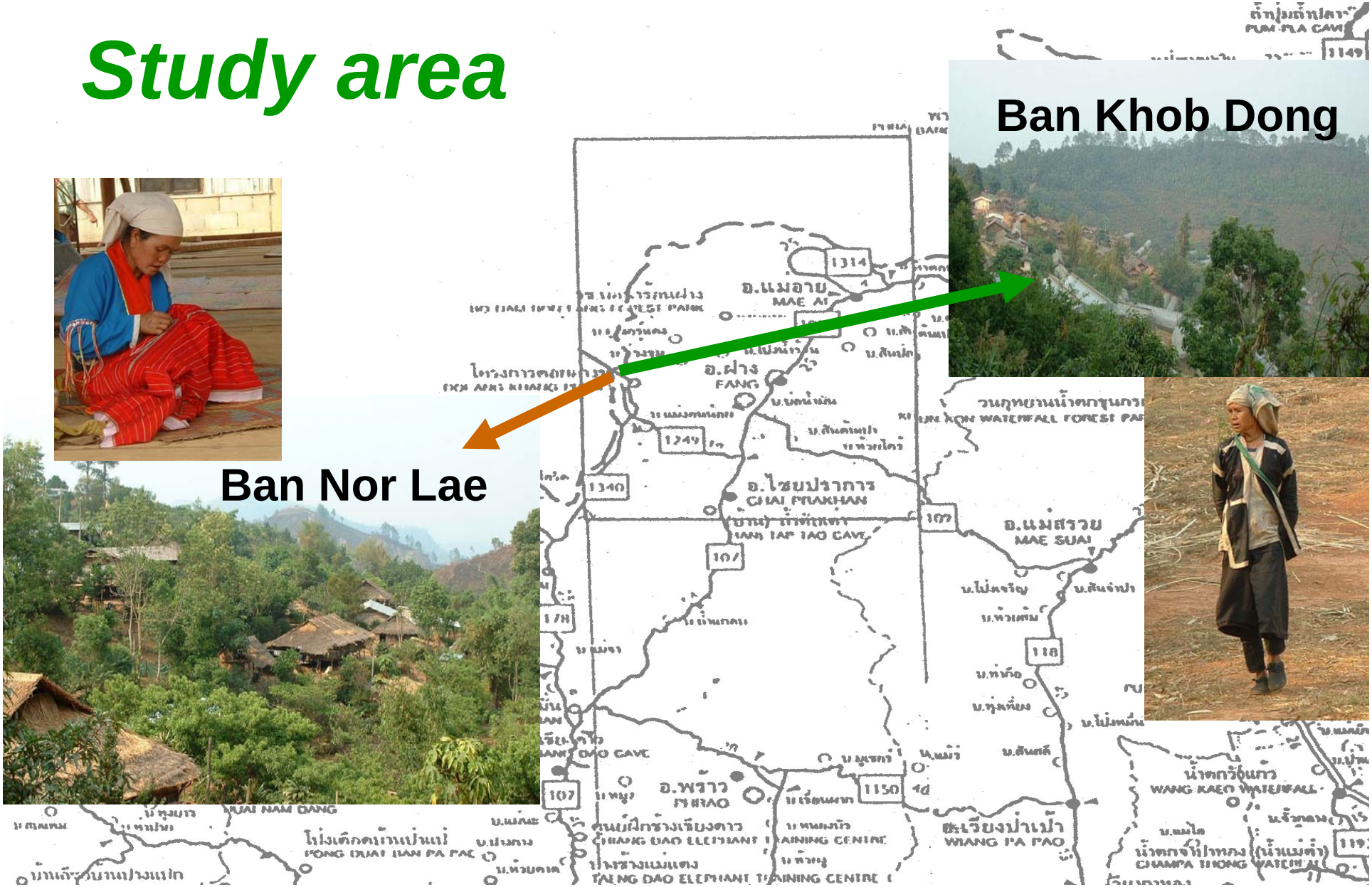
Ban Khob Dong
Ban Nor Lae
อ.แม่อาย
MAE AI
อ.ฝาง
FANG
อ.ไชยปราการ
CHAI PRAKHAN
อ.แม่สรวย
MAE SUAI
อ.พราว
PRAO
อ.เชียงป่าเป้า
WIANG PA PAO
น้ำตกวังแก้ว
WANG KAEO WATERFALL
น้ำตกจำปาทอง
CHAMPA THONG WATERFALL
โรงเรียนบ้านป่าแป๋
PONG DUAI BAN PA PAE
TALANG DAO ELEPHANT TRAINING CENTRE

Study area

- **Both villages have been targeted by the Royal Project Station of Ang Khang**

- **Local knowledge has been strongly influenced by its exposure to the Royal Project**

- **Major emphasis of external agencies is on protection of watershed functions**

Results

Major land use systems found in the area

- **Swidden cultivation (only Black Lahu)**
- **Paddy fields (only Black Lahu)**
- **Sylvopastoral system (mainly Palong)**
- **Home gardens (mainly Palong)**
- **High-intensity agriculture, e.g. greenhouses (only Black Lahu)**

Results

Swidden cultivation and terraced paddy field

- **Black Lahu believe that swidden cultivation system (slash and burn) can increase soil fertility.**

- **They used to produce paddy on terraced fields, but currently switch to temperate vegetables under advice of the Royal Project Foundation**

Sylvopastoral system

Palong (and to a lesser extent the Black Lahu) raise animals in forests and orchards with temperate fruit crops, such as peaches, persimmons, etc.

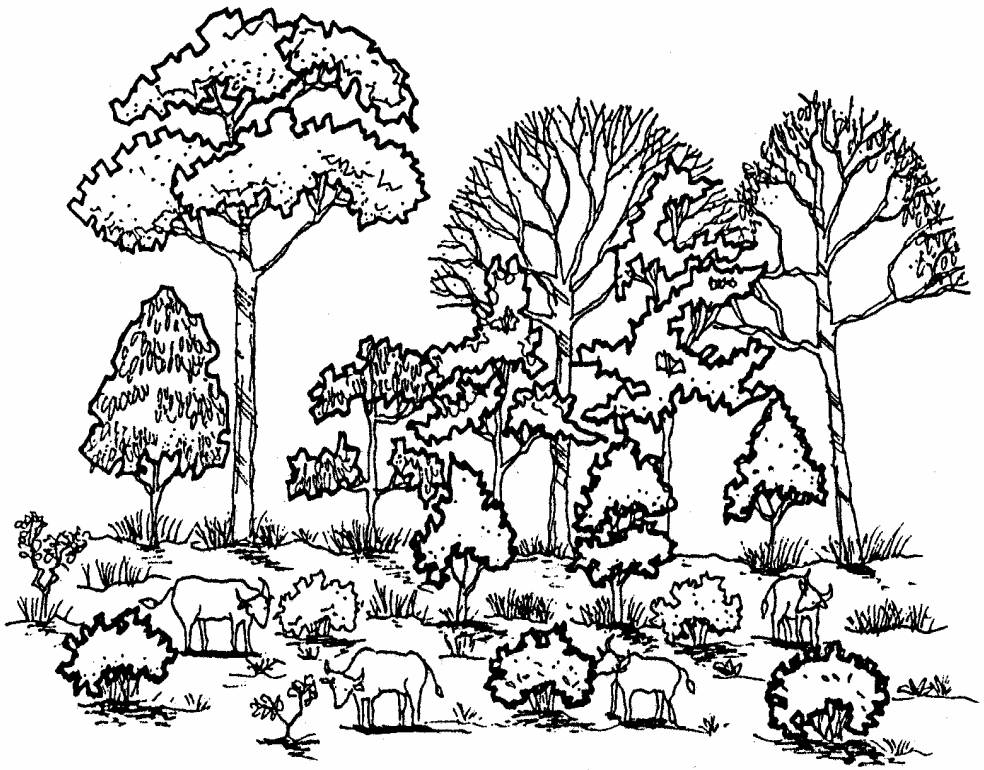

Sylvopastoral system and watershed functions

Palong

- **They do not plant cash crops because they suffer from lack of water in the dry season**

- **Animal husbandry is driven by the necessity of both transportation and provision of cash income**

***They have extensive knowledge of agroforestry ecological system such as soil erosion, water storage and names of forage plants**

Sample of forage plants

Local Name	Scientific Name
Pai rai	*Gigantochloa albociliata*
Pai bong	*Bambusa longispattha*
Pai sang	*Dendrocalamus strictus*
Kra tin	*Leucaena leucocephalade*
Tong gong	*Thysanolaena maxima*
Yha gay	*Eulalia siamensis*
Yha fak	*Themeda triandra*
Yha phank kwai	*Axonopus compressus*
Yha kam	*Phragmites karka*
Yha ka	*Imperata cylindrica*
Yha yoong kor lek	*Cyrtococcum pilipes*
Yha nad lek	*Pluchea eupato*
Yha kom bang	*Corex indica*
Yha dok kam	*Gymura crepidoides*
Yha rok krea	*Terminalia alata*
Bai ma kok pa	*Spondias pinnata*
Bai dok tien	*Impatiena chinensis*
Bai ta lo	*Schima wallichii*

The Uplands Program - Thailand

SSWM 2006

Knowledge base

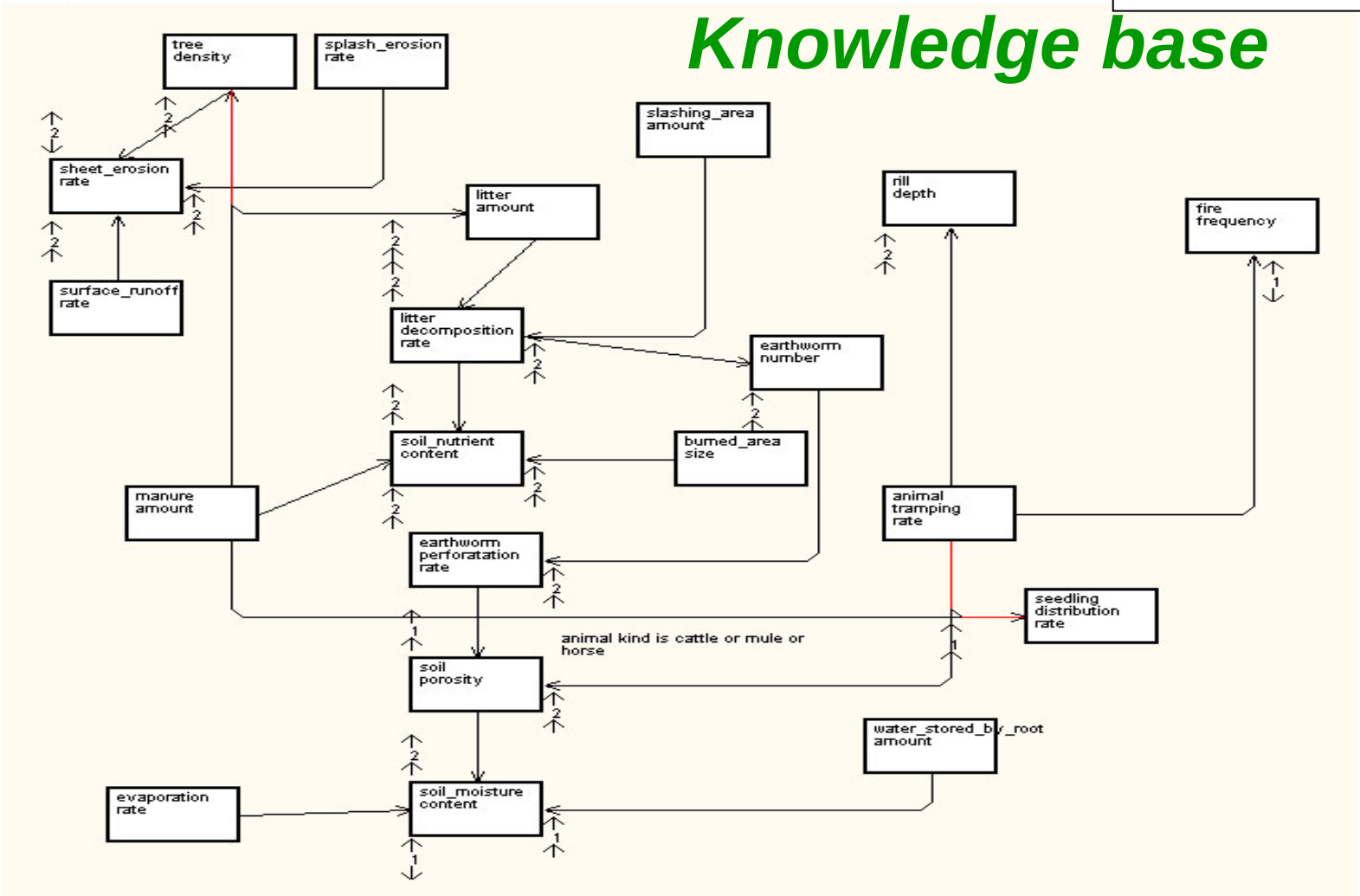

Local perceptions of causes and effects associated with the agroforestry and watershed-ecological system by Palong

Legend: Nodes (boxes) represent named attributes of components of the agro-ecosystem. Arcs represent a causal relationship between one node and another, as specified by the arrows and numeral. Small arrows represent the direction of change of values of the independent and the affected, dependent attribute. By using (↑) means an increase or high and (↓) means a decrease or low. By using number (1) means cause one way relationship and (2) means cause two way relationship.

Sylvopastoral system and watershed functions

Black Lahu

- **They put more emphasis on growing a variety of crops for cash income and rely less on animal husbandry activities**

- **Positive effects attributed to animal raising are the (1) distribution and growth rate of tree seedlings, (2) pruning of shrubs to control undergrowth vegetation, and (3) decrease of fire frequency**

- in contrast to conventional wisdom that animal husbandry in sloping land should be abandoned

Knowledge base

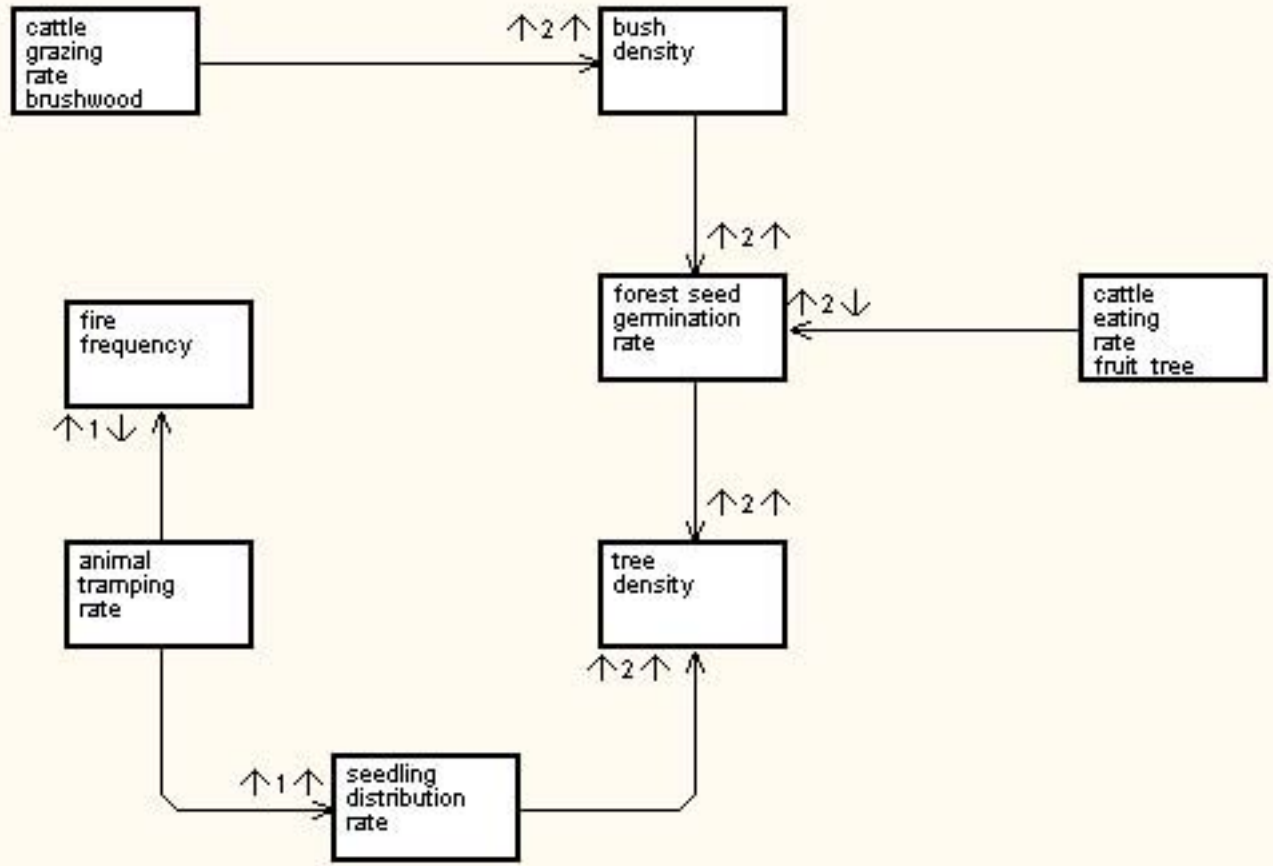

Local perceptions of causes and effects associated with the agroforestry and watershed-ecological system by Black Lahu

Legend: Nodes (boxes) represent named attributes of components of the agro-ecosystem. Arcs represent a causal relationship between one node and another, as specified by the arrows and numeral. Small arrows represent the direction of change of values of the independent and the affected, dependent attribute. By using (↑) means an increase or high and (↓) means a decrease or low. By using number (1) means cause one way relationship and (2) means cause two way relationship.

Home garden

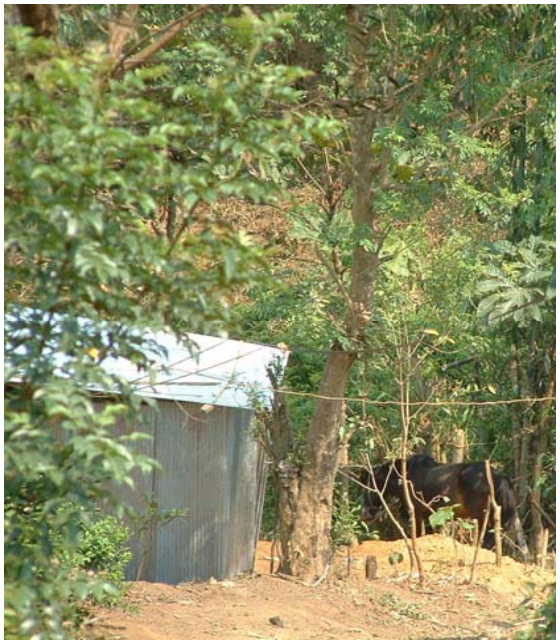

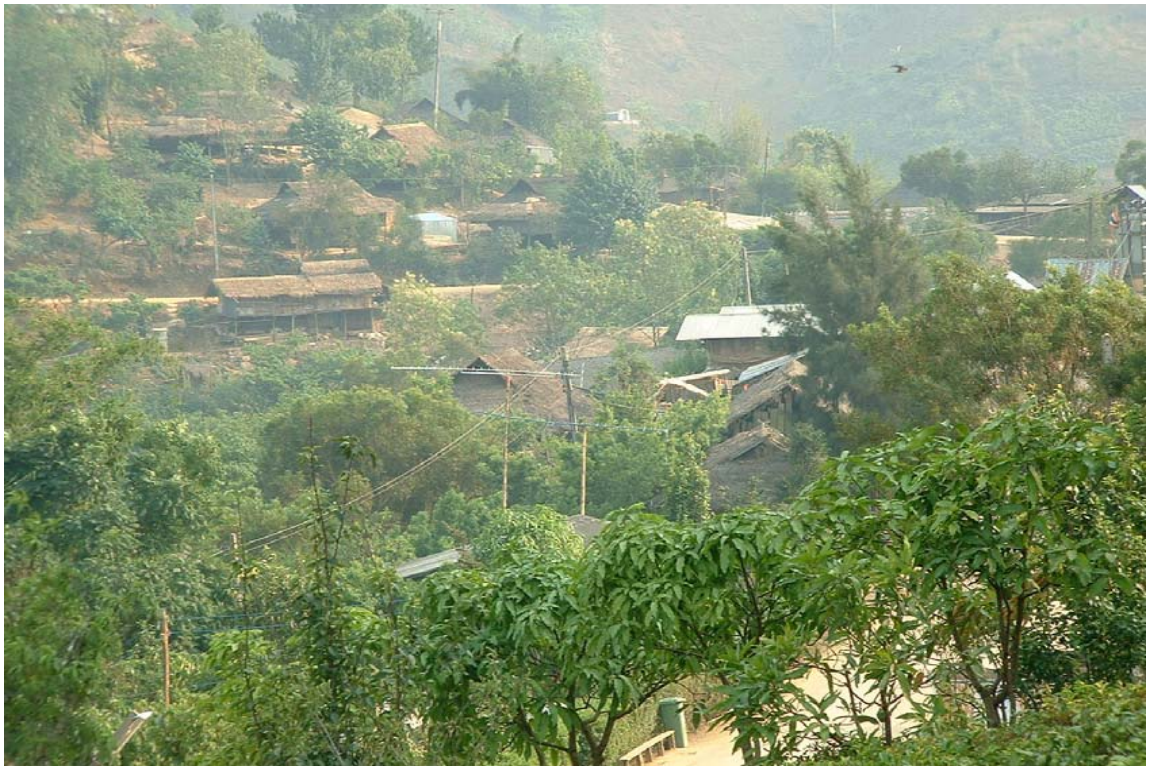

Both Palong and Black Lahu use inter-cropping to cultivate temperate fruit trees, vegetables, herbs, and raise animals on the same plot.

Home garden

- **Palong**

  *** Almost 100% of the non-staple food consumption is derived from home gardens (regarded as a “food bank” to support self-sufficiency)**

  *** High diversity of crops found in home gardens**

- **Black Lahu**

  *** Home gardens are subject to rapid modifications, increasingly transformed into intensive systems, such as greenhouses**

  *** Only few families keep the traditional home gardens – reduction of crop diversity**

Sample of home garden species

Local Name	Scientific Name	Utility
Pumpkin	*Cucurbita sp.*	Edible, sale, forage
Bird pepper	*Capsicum frutescens*	Fruit
Galanga	*Languas galanga*	Root, flower
Lemon grass	*Cymbopogon citratus*	Root
Ginger	*Zingiber officinale*	Root
Yam bean	*Ipomoea batatas*	Young leaf
Corainder	*Coriandrum sativum*	Stem
Shallot	*Allium ascalonicum*	Stem
Egg plant	*Solanum melongena*	Fruit
Pomelo	*Citrus maxima*	Fruit
Mango	*Mangifora indica*	Fruit
Sponge gourd	*Luffa acutangula*	Fruit
Egg plant	*Solanum torvum*	Fruit
Corn	*Zea mays*	Pod
Banana	*Musa sapientum*	Fruit
Cucumber	*Cucumis sativus*	Fruit
Chaom	*Acacia insuavis*	Leaf
Pak pam	*Acanthopanax trifoliatum*	Leaf
Papaya	*Carica papaya*	Fruit
Bamboo	*Bambusa natans*	Shoot
Bamboo	*Dendrocalamus membranaceus*	Shoot

Conclusion

- **The local knowledge and practices identified in this study contrast with the simplified and negative image that mainstream society tends to construct of highland agricultural systems**

- **Local knowledge offers alternative or complementary explanations of ecological cause-effect relationships**

- **Integrating local and scientific knowledge can provide useful resources for striving towards more sustainable highland watershed agro-ecosystems**

Thank you